ZANUSSI PROFESSIONAL

Standard Preparation 1000 mm Work Table

ITEM # _____

MODEL # _____

NAME # _____

SIS # _____

AIA # _____

132723 (TG1000PN) Work table 1000mm

Short Form Specification

Item No. _____

The 50mm high worktop in 304 AISI stainless steel, 1mm in thickness, has upturned edges and incorporates a layer of sound deadening, waterproof and fireproof material. Square section legs 40x40mm on 1" height-adjustable feet in 304 AISI stainless steel.

APPROVAL: _____

Main Features

- Ideal for central positioning in the kitchen, either as island installation or back to back.
- The table can be ordered with the drawer of 400 mm or 600 mm (optional accessory): thanks to the design of the drawer, additional drawers can be added to the first single drawer to create chest of 2, 3 or 4 drawers based on customer's needs.
- Sturdiness, stability and reliability of table accurately tested.

Construction

- 50 mm worktop in 304 AISI stainless steel, 10/10 in thickness with upturned edges and reinforced waterproof underpanel, incorporates a layer of sound deadening materials.
- 400 or 600 mm wide single drawer, chest of 4 drawers, lower shelf, three-sided underframe and set of castors as alternative to the feet, can be fitted as optional on all work tables.
- 40 mm-thick lower shelf (available as optional accessory on some models) slots easily into place at a height of 200 mm from the floor. Lower shelf is compulsory to install the chest of drawers.
- Square section legs and 40 mm height-adjustable feet in 304 AISI stainless steel.
- Table top slots into legs without using screws to facilitate installation.
- Delivered in knock-down package.
- Wide range of taps are available to suit every need.
- 100 mm upstand with 10 mm radioused corner and 13 mm deep, designed to be used against a wall.

Optional Accessories

- Overshelf, neutral, one tier, 1000 mm — PNC 132964 ❑
- Overshelf, with led light and ceramic light, one tier, 1000mm — PNC 132988 ❑
- Lower shelf for 1000 mm tables and sinks and for 1600 mm undercounter dishwasher sinks — PNC 855144 ❑
- Set of 4 wheels (2 with brake) d. 100mm for tables and sinks (total height on wheels= 993 mm) — PNC 855150 ❑
- 3-sided underframe for 1000mm tables — PNC 855151 ❑
- Single drawer GN 1/1, 400mm — PNC 855280 ❑
- Single drawer, 600mm — PNC 855281 ❑
- Additional drawer, 600mm (to set up a chest of 2, 3, 4 drawers) — PNC 855295 ❑
- Additional drawer GN 1/1, 400mm (to set up a chest of 2, 3, 4 drawers) — PNC 855298 ❑

Standard Preparation 1000 mm Work Table

Front

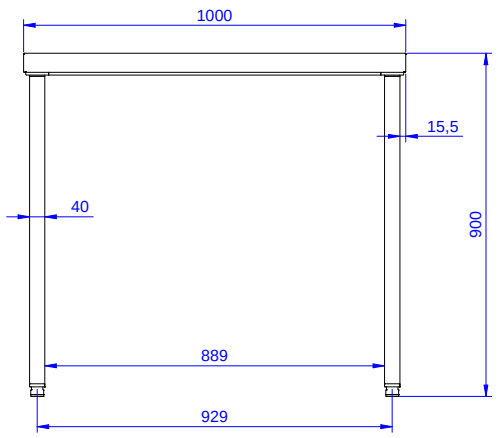

Side

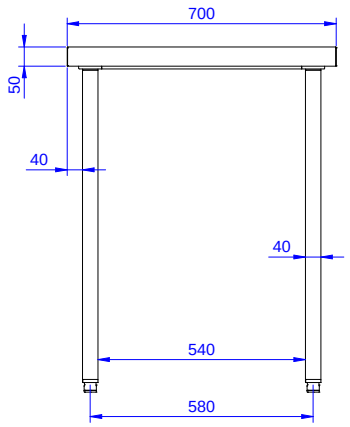

Top

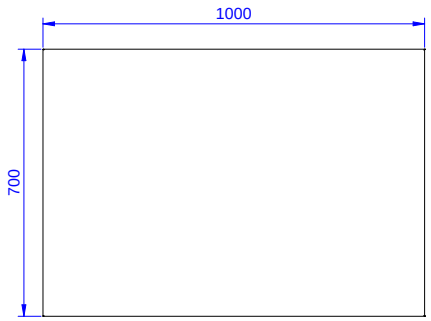

Key Information:

External dimensions, Width:	
132723 (TG1000PN)	1000 mm
External dimensions, Depth:	700 mm
External dimensions, Height:	900 mm
Worktop thickness:	50 mm
Net weight:	24.4 kg

The company reserves the right to make modifications to the products without prior notice. All information correct at time of printing.

2024.10.09